Product Data Sheet

910 Anti-Static Bar

Product code: 910

The Model 910 anti-static bar incorporates an inductively coupled design that achieves powerful static neutralisation with completely shockproof operation.

The design is compact, yet rugged, for most industrial applications and has become an industrial standard for reliable, cost effective neutralisation. The Model 910 is powered by the Model 904.

Features	Benefits
Powerful ion production	Fast charge decay times
Small cross-section	Suitable for installations where space is limited
Short-circuit proof	Accidental earthing of one electrode allows the remaining electrodes to continue to operate
Sealed versions available	Ensures reliable operation in harsh environments

Technical Characteristics

Dimensions	Cross section - 16mm (w) x 20mm (h) Length - 80 to 4000mm in 20mm steps
Weight	Approx 750gm per metre
Maximum Operating Temperature	85°C
Operating voltage	7.0kV
Pin energy	Approx 0.15 millijoules
Cable	2 metres shielded in flexible conduit; longer lengths can be ordered
Construction	Anodised aluminium
Emitters	Stainless steel moulded in polypropylene
Mounting	M4 x 20mm studs

Product shown in this document may be covered by one or more patents, patents applied for and/or registered designs and/or trade marks. For further info please refer to our Head Office or visit www.meech.com.

Meech International UK: +44(0)1993 706700 US: +1 330 564 2000 Belgium: +32 8067 0204 email: sales@meech.com
Hungary: +36 27535075 China: +86 400 820 0102 web: www.meech.com

THE QUEEN'S AWARDS FOR ENTERPRISE: INTERNATIONAL TRADE 2009 AND 2012

© Meech Static Eliminators Ltd 2012

Product Data Sheet

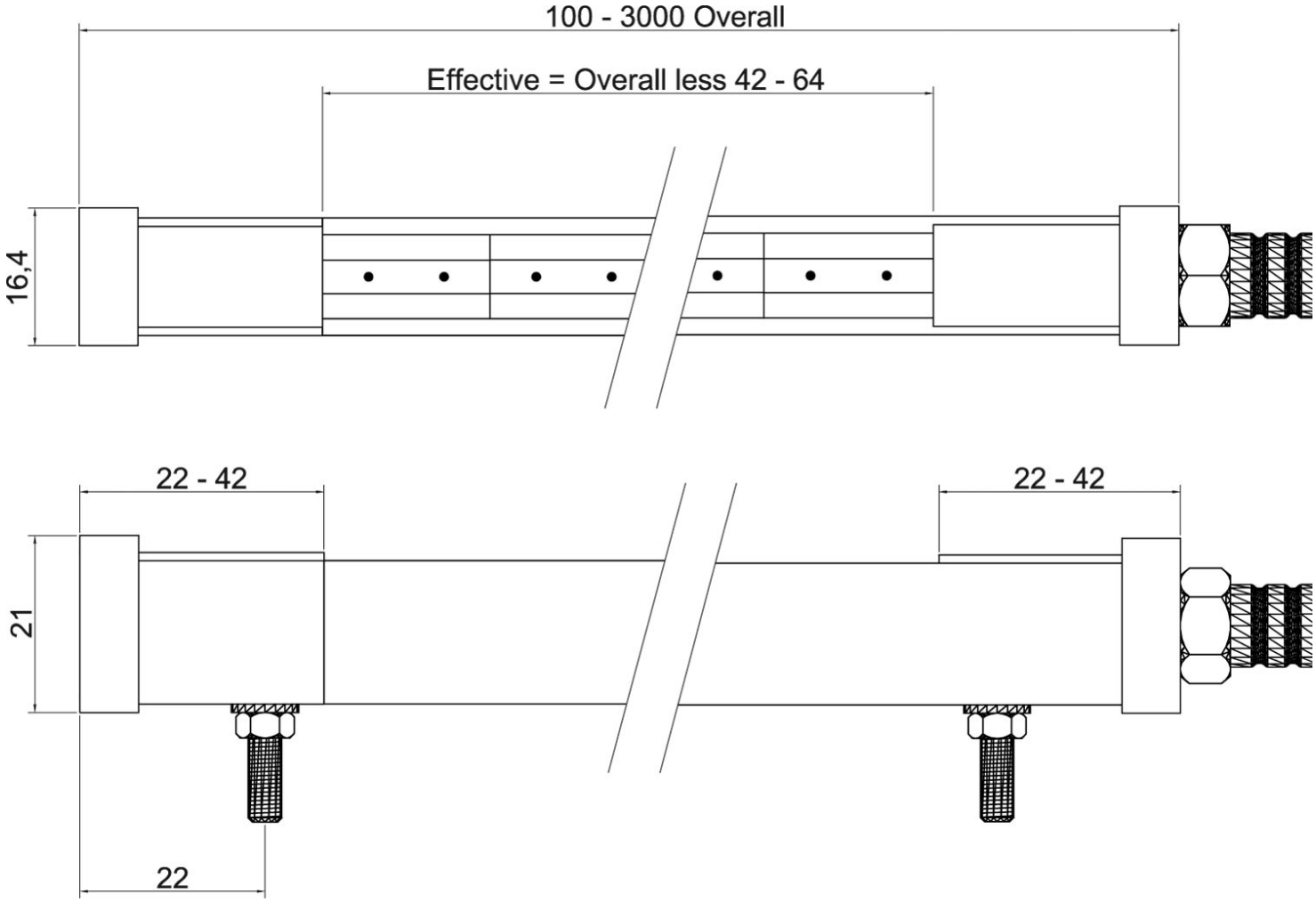

Product shown in this document may be covered by one or more patents, patents applied for and/or registered designs and/or trade marks. For further info please refer to our Head Office or visit www.meech.com.

Meech International UK: +44(0)1993 706700 US: +1 330 564 2000 Belgium: +32 8067 0204 email: sales@meech.com
Hungary: +36 27535075 China: +86 400 820 0102 web: www.meech.com

THE QUEEN'S AWARDS FOR ENTERPRISE: INTERNATIONAL TRADE 2009 AND 2012

© Meech Static Eliminators Ltd 2012